PROJECT REFERENCE NO.	SHEET NO.
WBS: 47315.3.1	EC-3B
R/W SHEET NO.	
ROADWAY DESIGN ENGINEER	HYDRAULICS ENGINEER

MATTING INSTALLATION DETAIL

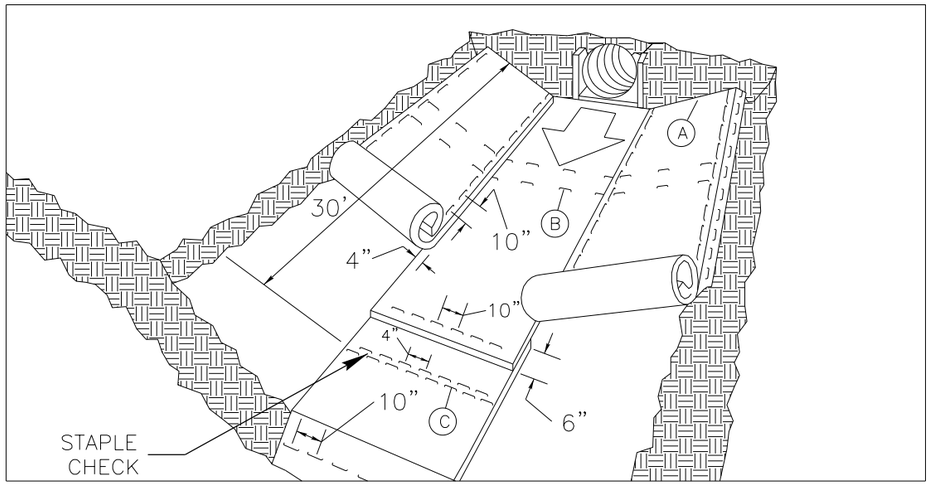

MATTING IN DITCHES

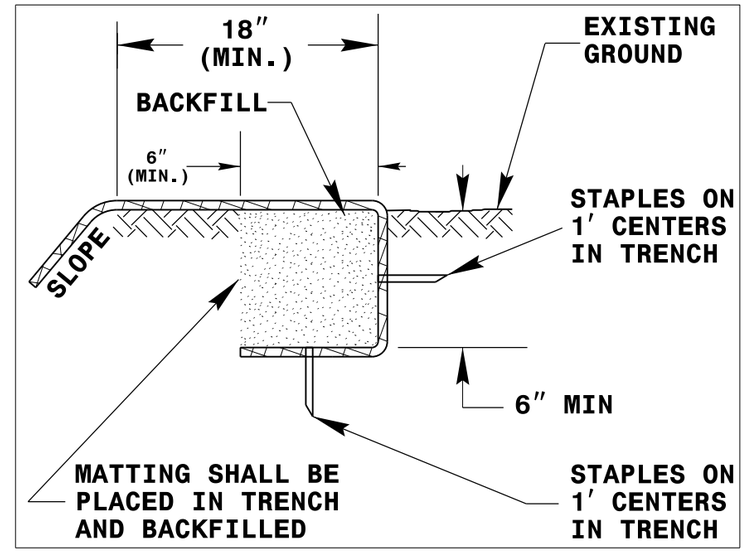

DIAGRAM A

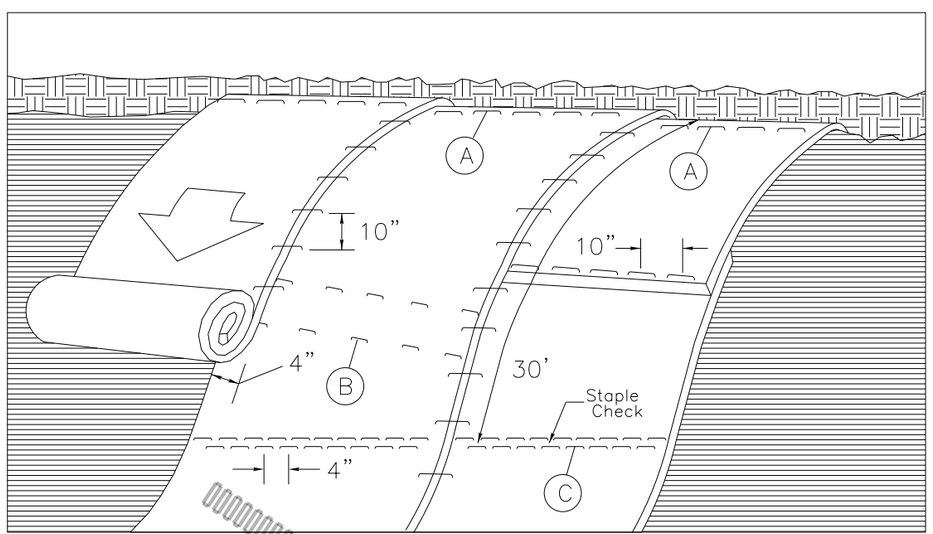

MATTING ON SLOPES

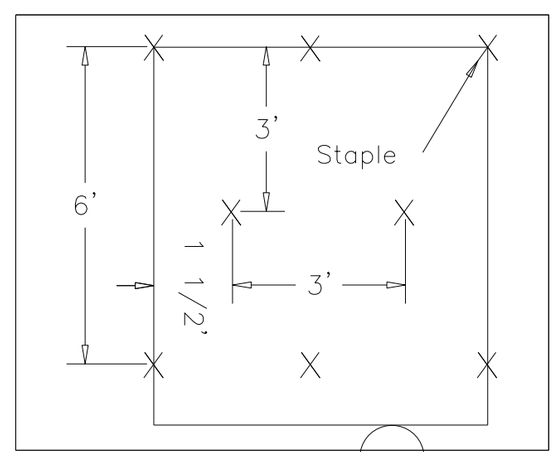

DIAGRAM B

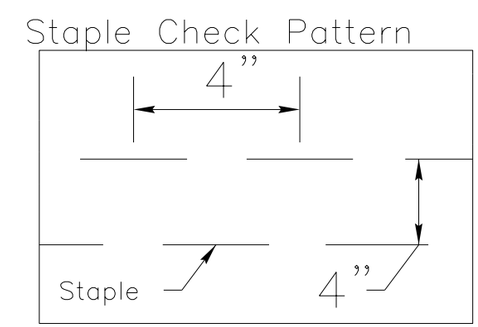

DIAGRAM C

NOTES:

THIS DETAIL APPLIES TO STRAW, EXCELSIOR, AND PERMANENT SOIL REINFORCEMENT MAT (PSRM) INSTALLATION.

STAPLES SHALL BE NO. 11 GAUGE STEEL WIRE FORMED INTO A "U" SHAPE WITH A MINIMUM THROAT WIDTH OF 1 INCH AND NOT LESS THAN 6 INCHES IN LENGTH.

NOT TO SCALE