PROJECT REFERENCE NO.	SHEET NO.
47315.3.1	

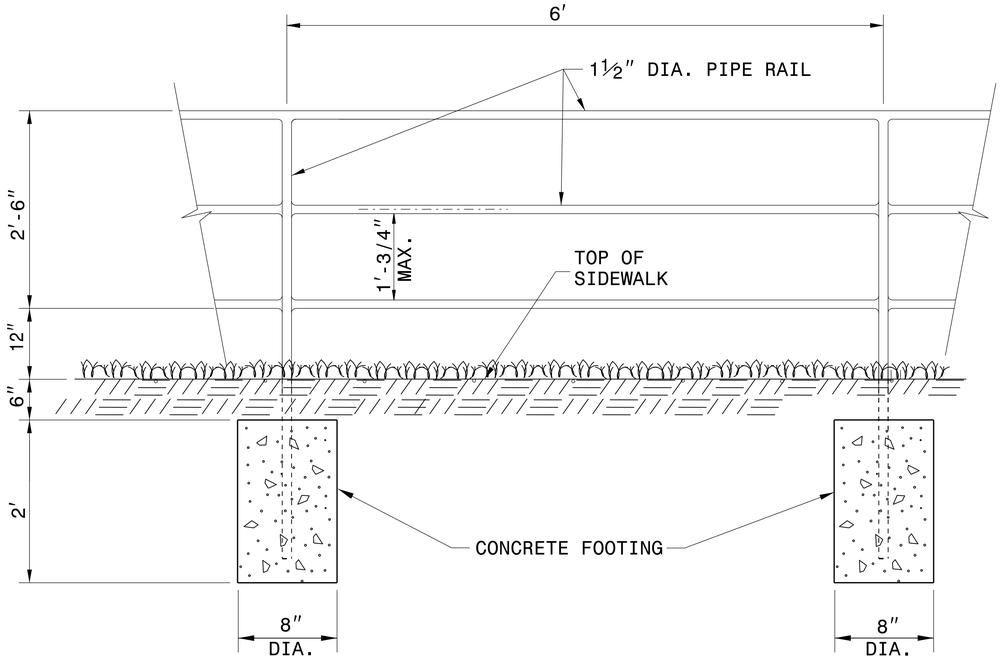

ELEVATION OF PROPOSED PEDESTRIAN HANDRAIL

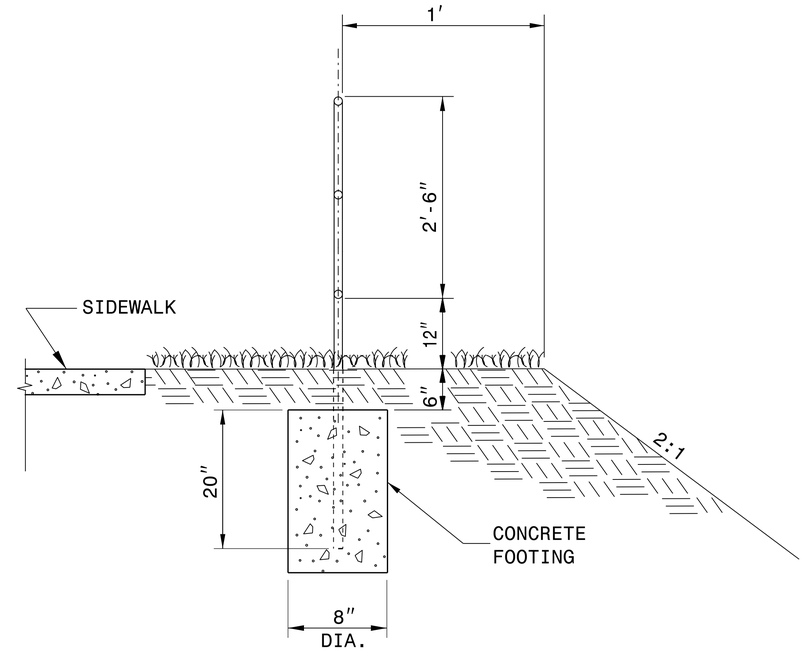

SECTION VIEW

NOTES:

CONSTRUCT PROPOSED STEEL PIPE RAIL OF 1½″ DIAMETER SCHEDULE 40 PLAIN END GALVANIZED STEEL PIPE MEETING THE REQUIREMENTS OF ASTM A53.

REPAIR GALVANIZING IN ACCORDANCE WITH SECTION 1076 OF THE NCDOT STANDARD SPECIFICATIONS.

PAINT, IF REQUIRED BY THE ENGINEER, IN ACCORDANCE WITH SECTION 1080 OF THE STANDARD SPECIFICATIONS.

WELD IN ACCORDANCE WITH ARTICLE 1072-20 OF THE STANDARD SPECIFICATIONS.

USE CLASS 'B' CONCRETE FOR HANDRAIL FOOTINGS.

PLACEMENT OF HANDRAIL IN RELATION TO SHOULDER BREAK POINT AND SIDEWALK MAY BE MODIFIED AS DIRECTED BY THE ENGINEER.

NORTH CAROLINA PROFESSIONAL SEAL 022966 ENGINEER

DOCUMENT NOT CONSIDERED FINAL UNLESS ALL SIGNATURES COMPLETED

CONTRACT STANDARDS AND DEVELOPMENT UNIT
Office 919-707-6950 FAX 919-250-4119

PROPOSED PEDESTRIAN SAFETY RAIL

ORIGINAL BY: E.E.WARD DATE: 12-99
MODIFIED BY: T.S.Spell DATE: 1-4-05
CHECKED BY: DATE:
FILE SPEC.: w:details/stand/metric/retainwall_handrails.dgn

29-MAR-2018 07:55
S:\Contracts\Contracts\Special Details\jhowerton\handrail.dgn
jhowerton AT CSD-229965